Kenilkumar Surani

Mechanical CAD Designer
+49 157 5825 3235
kenilsurani2141@gmail.com
www.linkedin.com/in/kenil-surani

About Me

- Detail-oriented Mechanical and Automobile Engineer with strong expertise in 3D CAD modeling, mechanical drafting, tolerance analysis, and mechanical systems design. Certified SolidWorks Professional skilled in developing complex mechanical assemblies, producing detailed engineering drawings, and performing basic FEA analysis. Experienced in automotive product development, with hands-on project work involving transmission systems and electric vehicle design. Proficient in SolidWorks, with good knowledge of Siemens Solid Edge, Autodesk Inventor, Keyshot, SolidWorks Visualize, and Ansys Workbench. Successfully handled numerous design projects as a freelancer, demonstrating reliability and technical excellence.

SKILLS

CAD Software:
- SolidWorks (Advanced)
- Siemens Solid Edge (Proficient)
- Autodesk Inventor (Proficient)
- SolidWorks Visualize (Skilled)
- Keyshot (skilled)

Mechanical Engineering Skills:
- 3D CAD Modeling
- Mechanical Drafting & Manufacturing Drawing
- Tolerance Analysis
- Mechanical Assembly Design
- Structural Mechanics of Solids
- FEM
- BOM Preparation
- Automotive Product Development (Transmission Systems, Electric Vehicles)

Analysis & Simulation:
- Ansys Workbench (Basic FEA)

Other Skills:
- Freelance Project Management
- Technical Documentation
- Visual Presentation of Mechanical Designs

IMMERSION HEATER – LABORATORY EQUIPMENT DESIGN

Client: Laboratory (Freelance Project) (July 2020)

Description:
Designed a custom immersion heater for a laboratory client. Tasked with developing a robust and detailed 3D CAD model of the heater assembly while ensuring accurate representation of all functional components. Focused on achieving optimal geometry and clarity for both prototype and manufacturing purposes.

Role & Responsibilities:
•Developed a complete 3D model in SolidWorks covering all critical design features.
•Created precise assemblies and detailed geometry to meet the lab's requirements.
•Produced high-quality, photorealistic renderings using Keyshot, delivering visually appealing output for client approval and marketing.

Software/Tools Used:
•SolidWorks (3D CAD modeling, assembly design)
•Keyshot (Photorealistic rendering)

Key Outcomes:
•Delivered detailed model and renderings on schedule, fully matching client's technical and visual requirements.
•Enhanced client's ability to communicate product intent for prototype and demonstration purposes.

IMMERSION HEATER – LABORATORY EQUIPMENT DESIGN

Visuals:

•Included are sample isometric renderings of the immersion heater design for the client

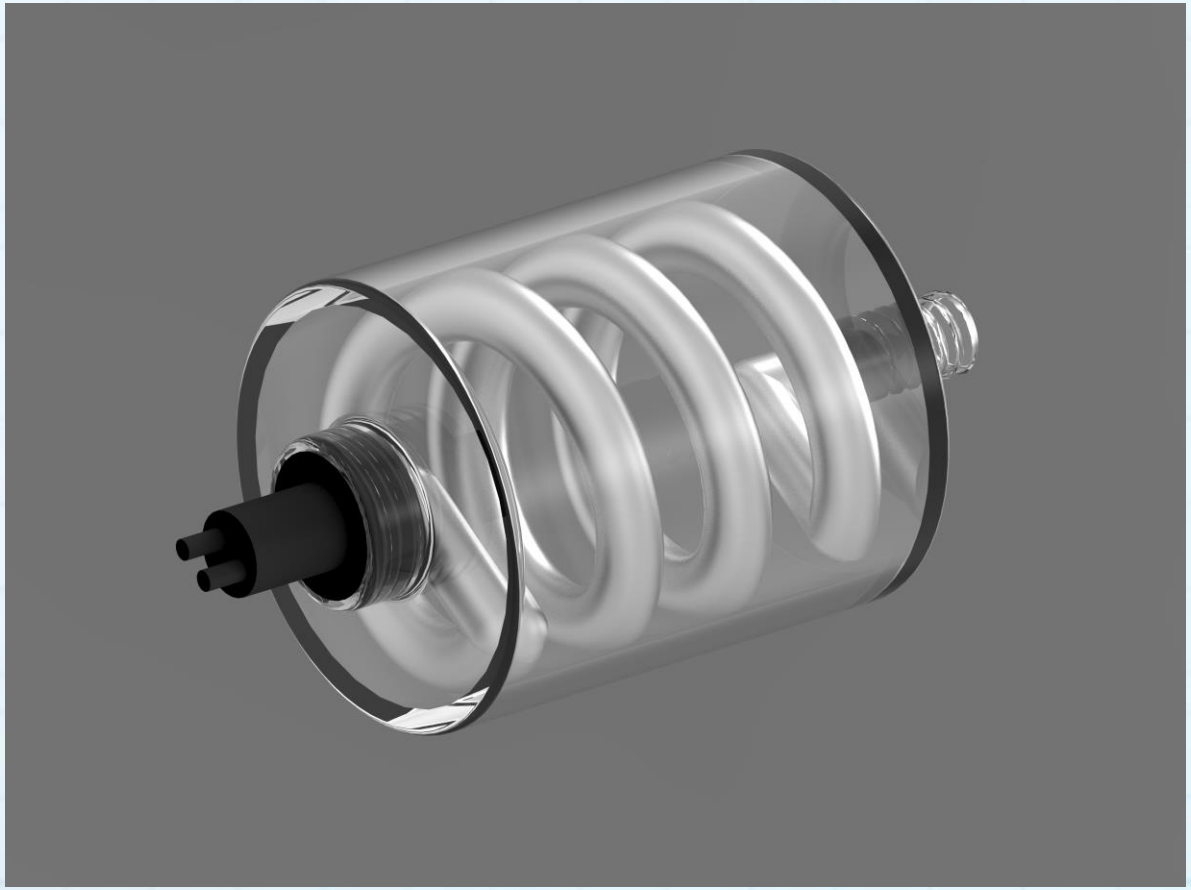

SPIDER ROBOT BALL FOR FIRE EXTINGUISHER DELIVERY

Client: Mr. Madhav Mansuriya (July 2020 – September 2020)

Description:

Designed and prototyped a Spider Robot Ball capable of delivering a fire extinguisher (CO_2) ball directly to the site of a fire. The robot features a transformative eight-leg mechanism that allows it to walk with high flexibility like a spider and contract into a ball shape for rapid rolling, enhancing speed and accessibility in challenging environments. This project was Supported by Startup India Innovation Fund

Role & Responsibilities:

- Served as lead CAD designer, developing the entire mechanical system from concept to finished prototype.
- Engineered a robust spring-based launching system for targeted fire extinguisher deployment.
- Integrated electronics, including sensors, tracking camera, and Raspberry Pi controlled servo systems, to allow autonomous navigation and actuation.
- Coordinated prototype fabrication using advanced 3D printing methods to test and validate all mechanical and electronic systems.

Key Technical Details:

- Custom mechanical assemblies designed and analyzed in SolidWorks.
- Spring mechanism engineered for safe, reliable CO_2 ball launching.
- Servo-driven multi-degree-of-freedom leg joints for realistic spider-like walking and rapid ball transformation.
- Full circuit and actuation system coded and integrated via Raspberry Pi microcontroller.

Key Outcomes:

- Successfully built and tested a functional prototype, achieving both reliable movement and fire extinguisher deployment in controlled environments.
- Demonstrated project for innovation funding bodies, receiving positive technical validation and support.

SPIDER ROBOT BALL FOR FIRE EXTINGUISHER DELIVERY

Visuals:

Design renderings

SPIDER ROBOT BALL FOR FIRE EXTINGUISHER DELIVERY

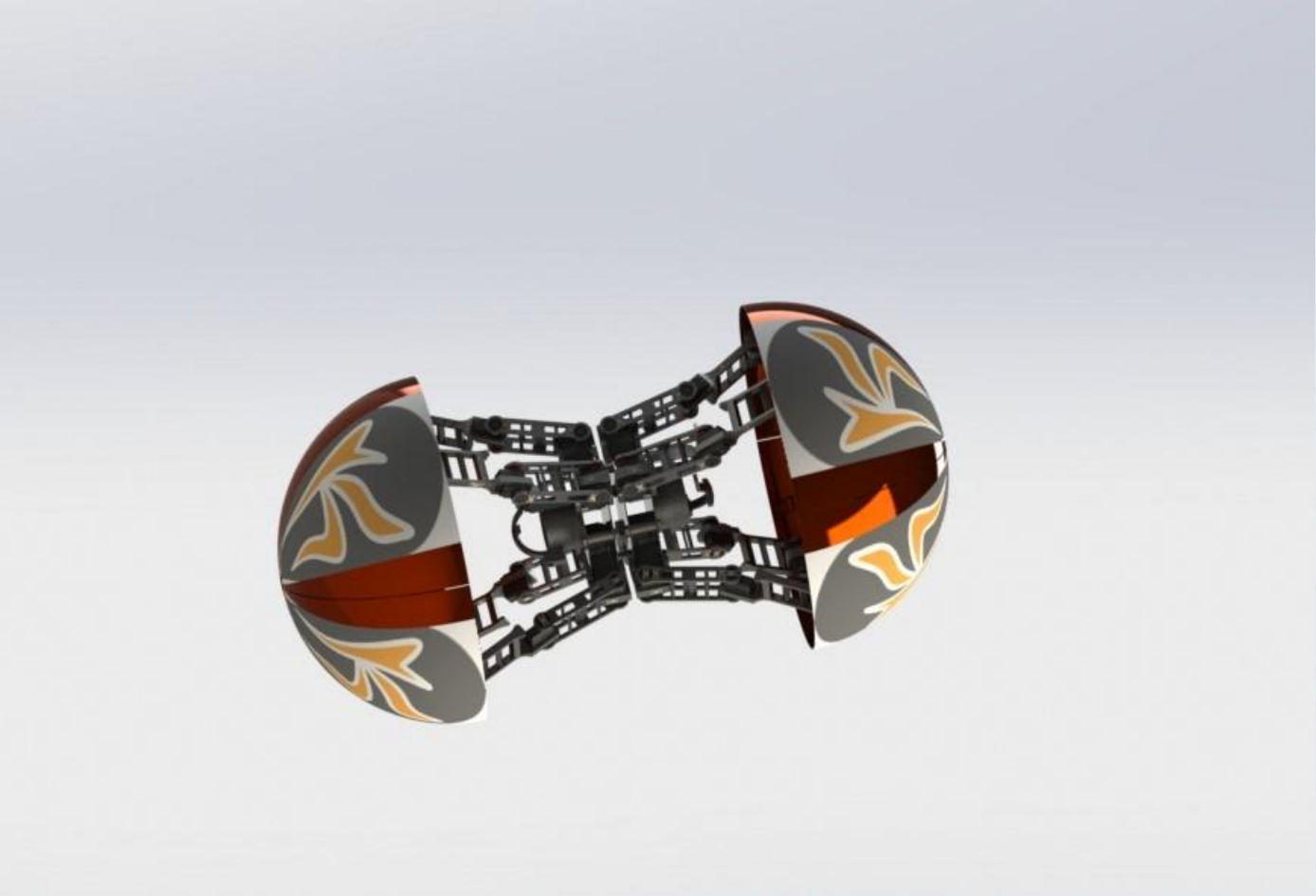

FULLY AUTOMATIC PLASTIC TUBE FILLING & SEALING MACHINE

Client: Punneli Technologies Limited (Dublin, Ireland) (October 2020 – January 2021)

Punneli Technologies limited is one startup company now this company operates in Australia as a Punneli Pty Limited (www.punneli.com)

Description:

Designed a state-of-the-art automatic tube filling and sealing machine for the packaging industry. The machine efficiently fills, seals, and processes plastic tubes for high-volume production environments. Developed under expert guidance of company's director Mr. Nessen Paul. this project required designing every custom mechanical component, from the feed system to the sealing mechanism, ensuring manufacturability and robust, reliable operation.

Role & Responsibilities:

- CAD designer responsible for the end-to-end mechanical design process.
- Modeled, assembled, and detailed every component in SolidWorks for complete system integration.
- Produced manufacturing drawings for each part, optimizing for CNC, sheet metal, and machined fabrication processes.
- Coordinated closely with the director, iterating designs based on technical feedback and production requirements.

Software/Tools Used:

- SolidWorks (Machine design, assembly, and manufacturing drawings)
- Animation preview and rendering tools for design validation and marketing

Key Outcomes:

- Delivered a fully documented, production-ready design package for immediate fabrication.
- Supported the client's transition into automated packaging solutions, contributing to quality and efficiency advances.
- Resulted in fabricated components closely matching the design, as verified through video and photographic records.

FULLY AUTOMATIC PLASTIC TUBE FILLING & SEALING MACHINE

Visuals:

Visual show the photo of machine without outer cover, photo of manufacturing And the small preview in video.

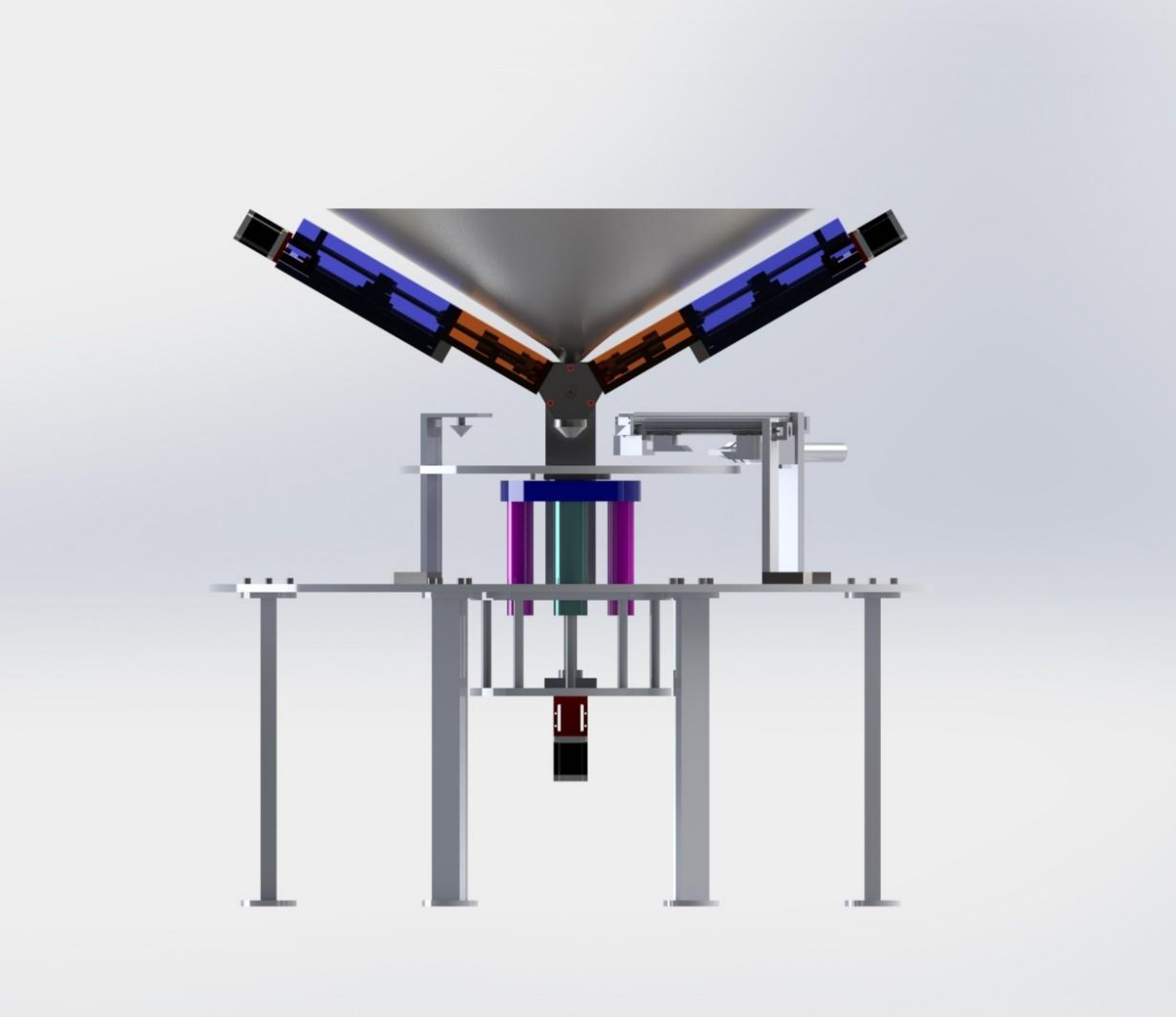

FULLY AUTOMATIC PLASTIC TUBE FILLING & SEALING MACHINE

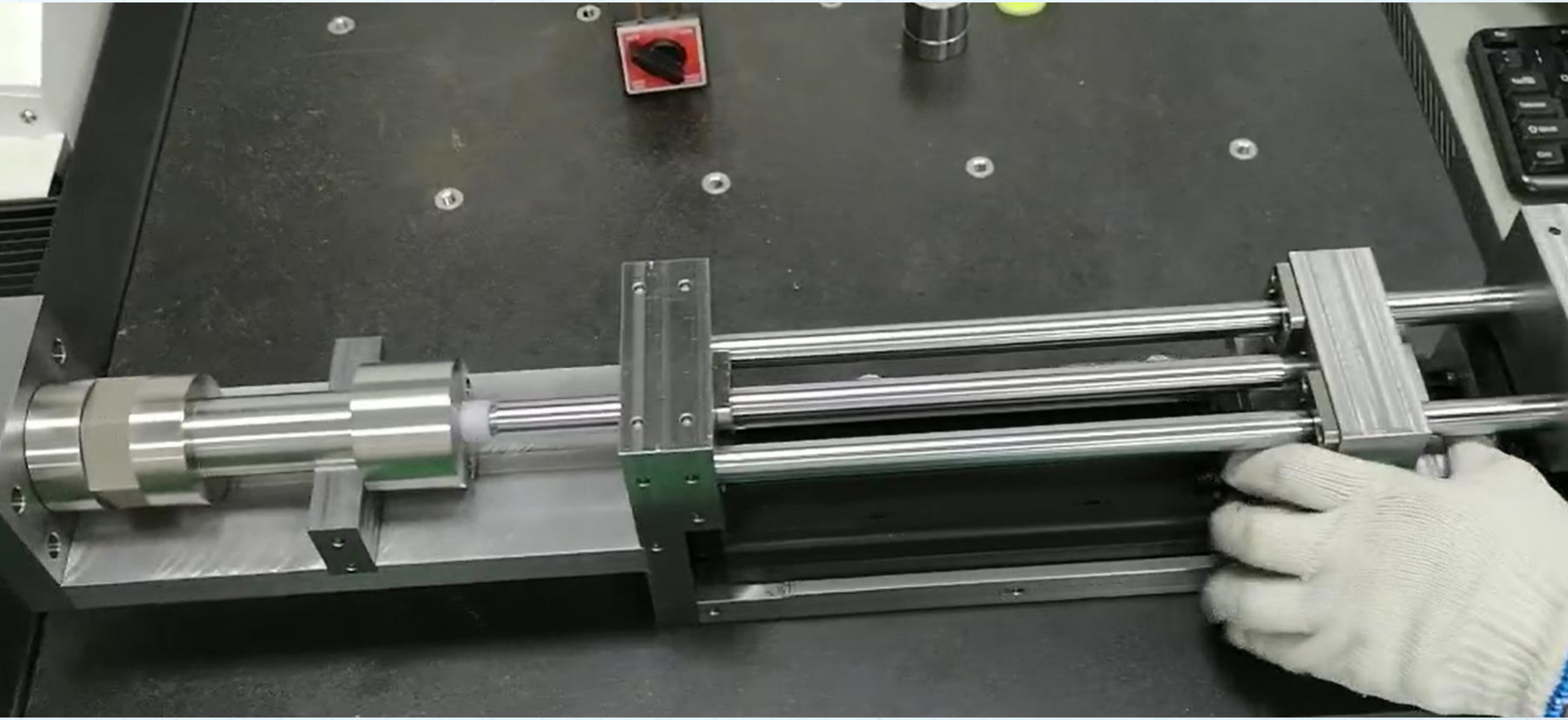

FULLY AUTOMATIC PLASTIC TUBE FILLING & SEALING MACHINE

PET HAIR CLEANER – PRODUCT DESIGN & VISUALIZATION

Client: Dino Lauando (USA-based) (April 2021)

Description:
Designed two distinct variants of a pet hair cleaner intended for manufacturing and retail distribution. The product is tailored for pet owners and includes an integrated roller, two roller blades, and two rubber blades. The roller blades maintain the roller's cleanliness by sweeping away collected debris into a waste tank, while the rubber blades effectively gather pet hair from fabric surfaces.

Role & Responsibilities:
- Developed complete product concepts and 3D CAD models for both variants.
- Engineered the internal blade configuration to maximize cleaning performance and ease of maintenance.
- Delivered high-quality, photorealistic renderings for marketing and promotional use in the client's product launch.

Software/Tools Used:
- SolidWorks (3D CAD design, assembly modeling)
- Keyshot (Product rendering)

Key Outcomes:
- Provided the client with visually compelling renderings that showcased product functionality and aesthetics.
- Helped facilitate the client's marketing efforts and prototype development for mass manufacturing.

PET HAIR CLEANER – PRODUCT DESIGN & VISUALIZATION

Visuals:

•Isometric views of both pet hair cleaner variants

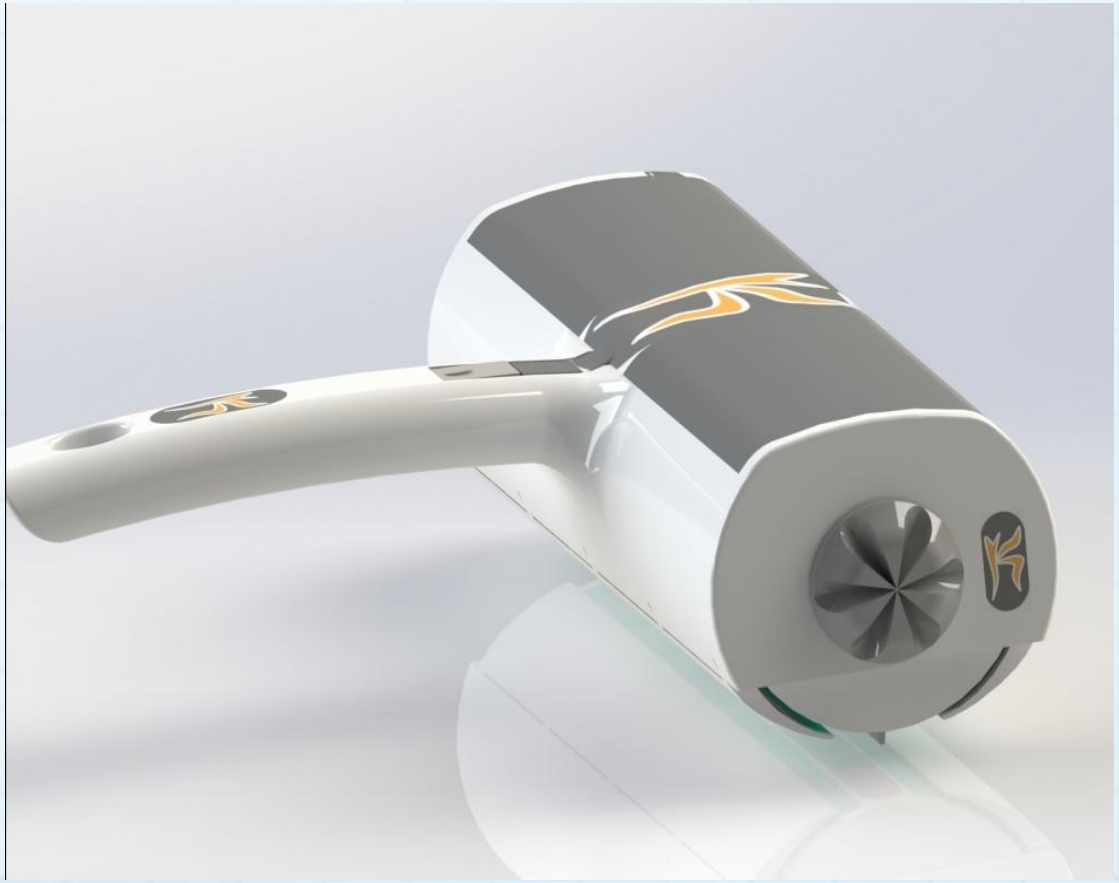

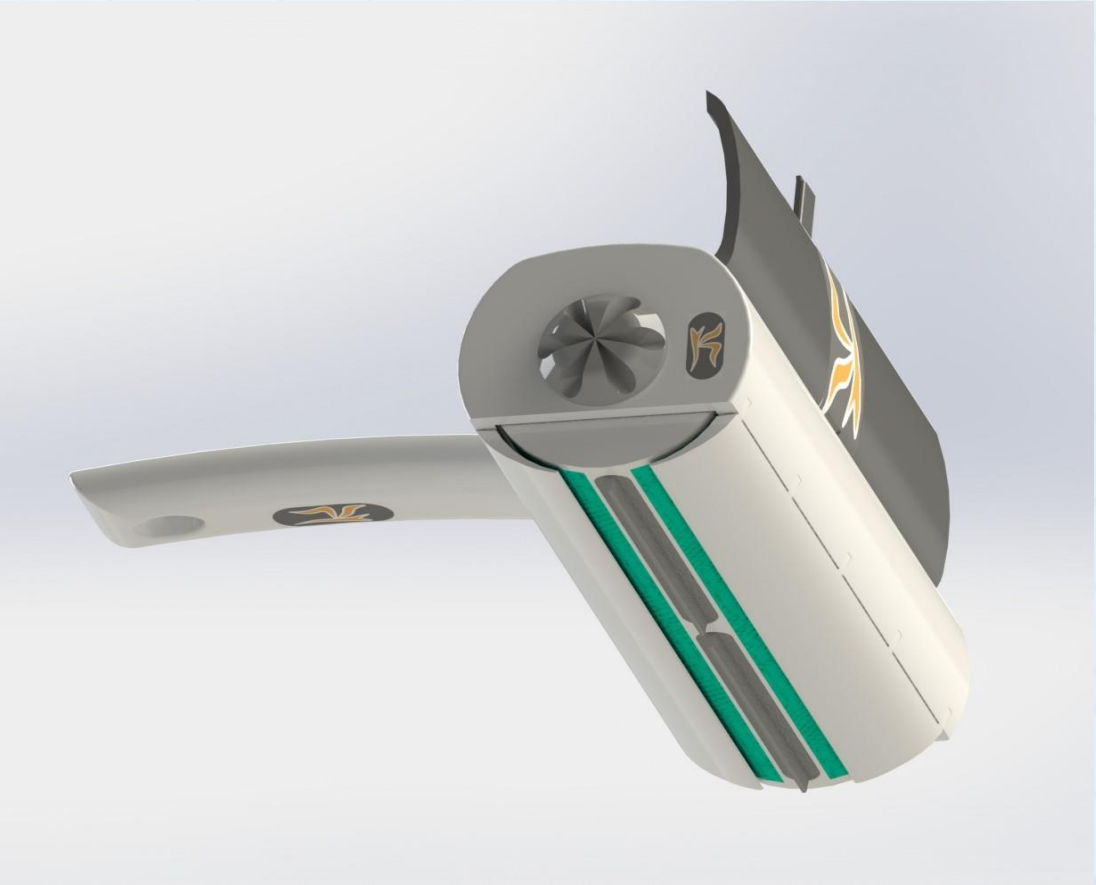

PET HAIR CLEANER – PRODUCT DESIGN & VISUALIZATION

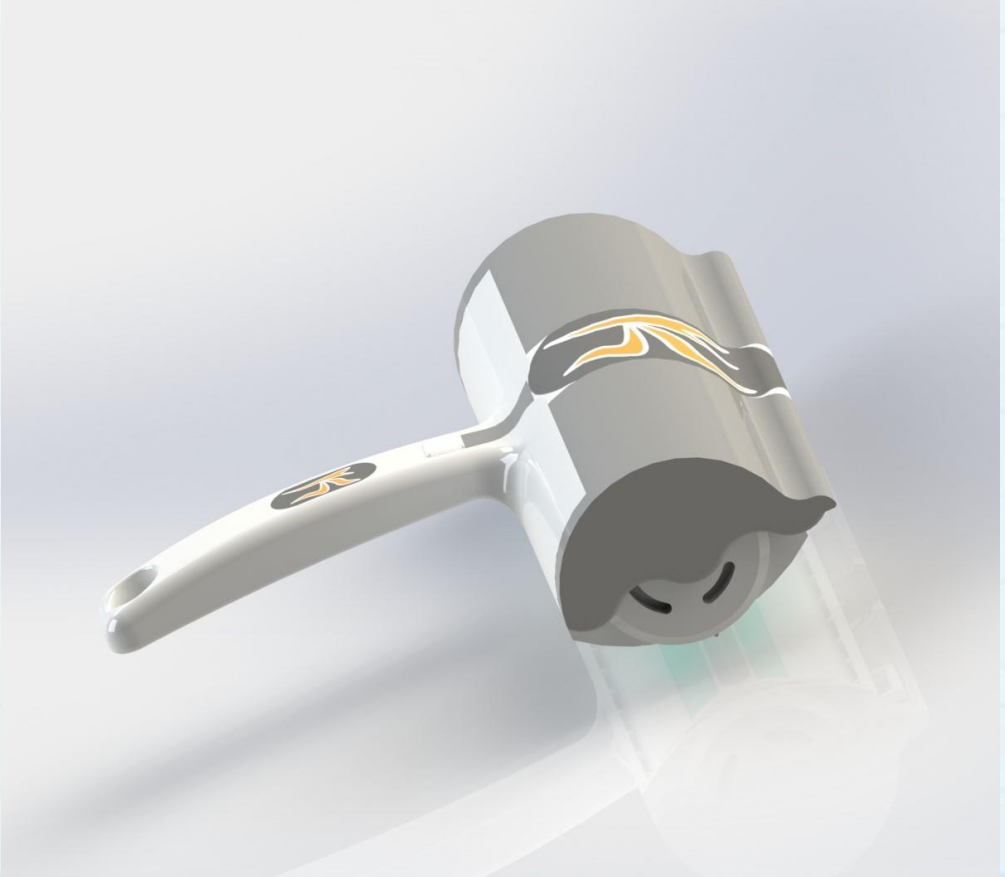

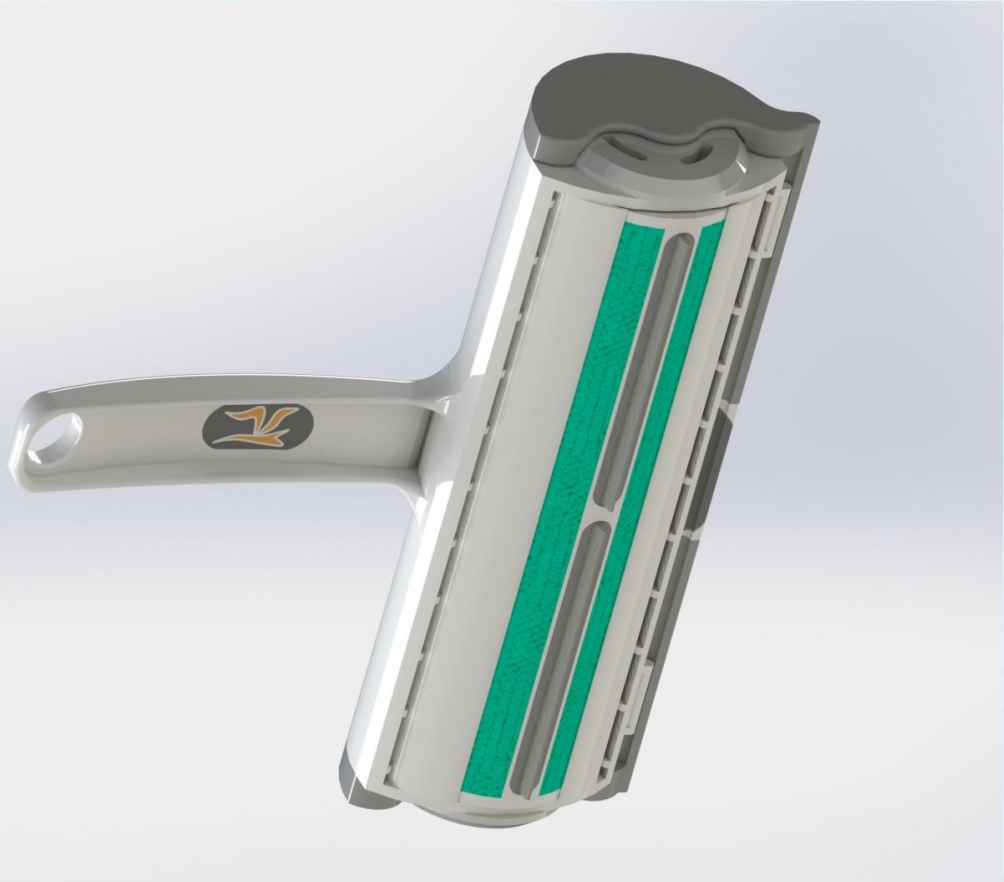

12RU DATA RACK ELECTRICAL ENCLOSURE

Client: IP Enclosures Pty Ltd (Australia) (November 2021)

Description:

Designed a 12RU, 600-deep data rack electrical enclosure for IP Enclosures Pty Ltd, serving industrial and commercial markets. This enclosure was engineered to meet IP66 ingress protection, IK10 impact resistance, and international standards EIA-310-D and IEC/ENAS60529.

Role & Responsibilities:

- Modeled the enclosure and all components using SolidWorks, focusing on manufacturability with 1.5mm galvanized steel sheets.
- Created detailed drawings for each part and assembly, including bill of materials and full dimensioning.
- Applied proper surface treatments and sealing (polyurethane, powder-coat) to ensure compliance and product durability.

Software/Tools Used:

- SolidWorks (CAD modeling, Sheet Metals, and manufacturing drawings)

Key Outcomes:

- Delivered fabrication-ready documentation supporting high-volume industrial production.
- Assisted the client in maintaining their product quality and competitive standards with clear, professional technical drawings.

12RU DATA RACK ELECTRICAL ENCLOSURE

Visuals:

•Sample image from the approved enclosure manufacturing drawing (shown below, with logo and critical dimension details from the original documents) **(* this is not complete sheet metal manufacturing drawing)**

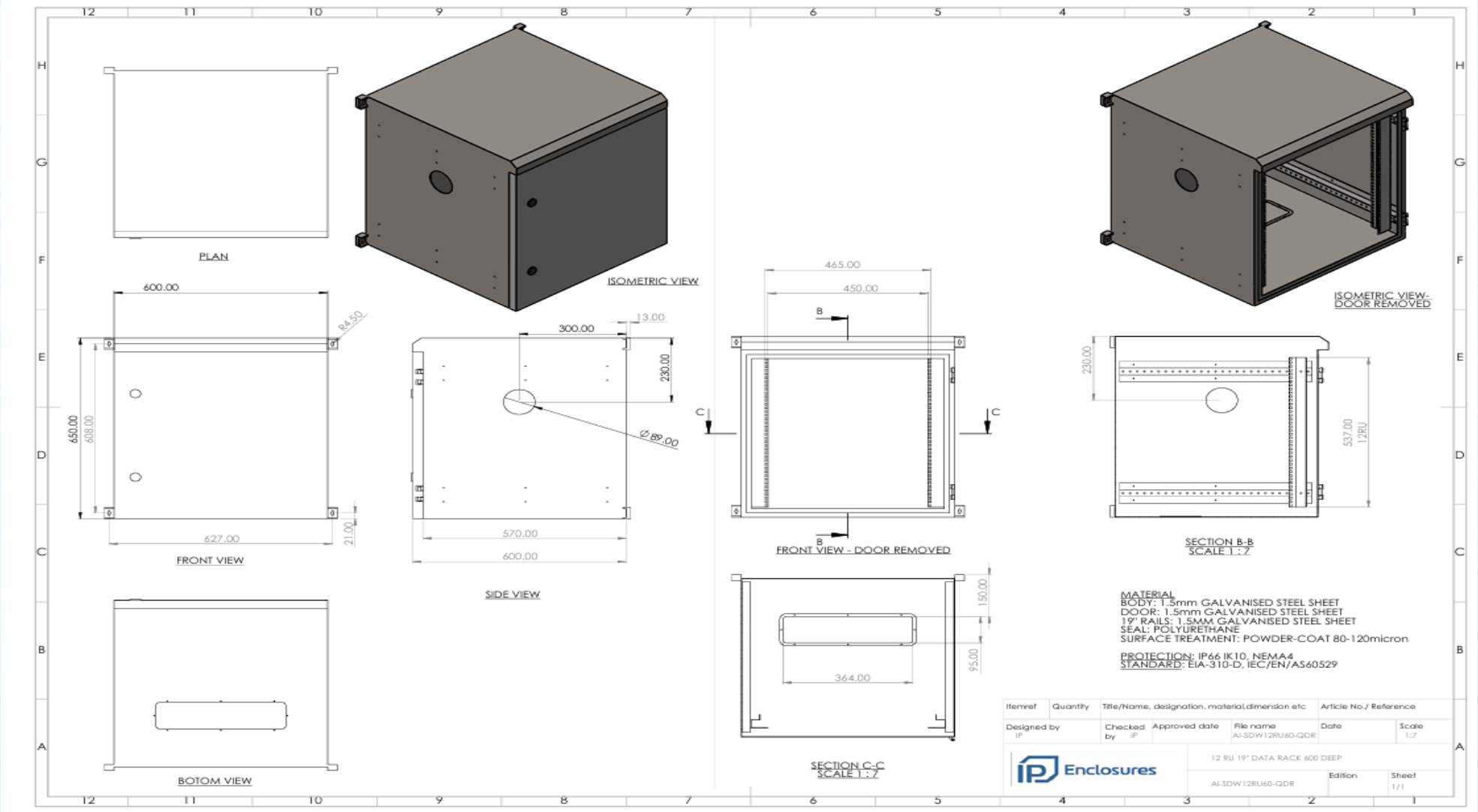

12RU DATA RACK ELECTRICAL ENCLOSURE (400 DEEP)

Client: Tro Pacific Holdings Pty Ltd (Australia) (November 2021)

Description:

Developed a 12RU, 400-deep data rack electrical enclosure tailored for industrial and commercial environments. This design aligns with stringent requirements for IP66 ingress protection, IK10 impact resistance, and recognized standards like EIA-310-D and IEC/ENAS60529, enabling high durability and versatile installations.

Role & Responsibilities:

- Modeled the entire enclosure and all individual components in SolidWorks, focusing on manufacturability and ease of production using 1.5mm galvanized steel sheet.
- Produced detailed manufacturing drawings, assembly plans, and bill of materials to support the client's direct fabrication workflow.
- Specified all surface treatments and seal designs (polyurethane, powder-coat) for extended durability and product lifecycle.

Software/Tools Used:

- SolidWorks (CAD design, sheet metal documentation)

Key Outcomes:

- Delivered manufacturing-ready documentation and isometric views for efficient industrial production.
- Enhanced client production capabilities with robust engineering drawings and precise technical specifications.

12RU DATA RACK ELECTRICAL ENCLOSURE (400 DEEP)

Visuals:

Sample page from the approved enclosure manufacturing drawing **(* this is not complete sheet metal manufacturing drawing)**

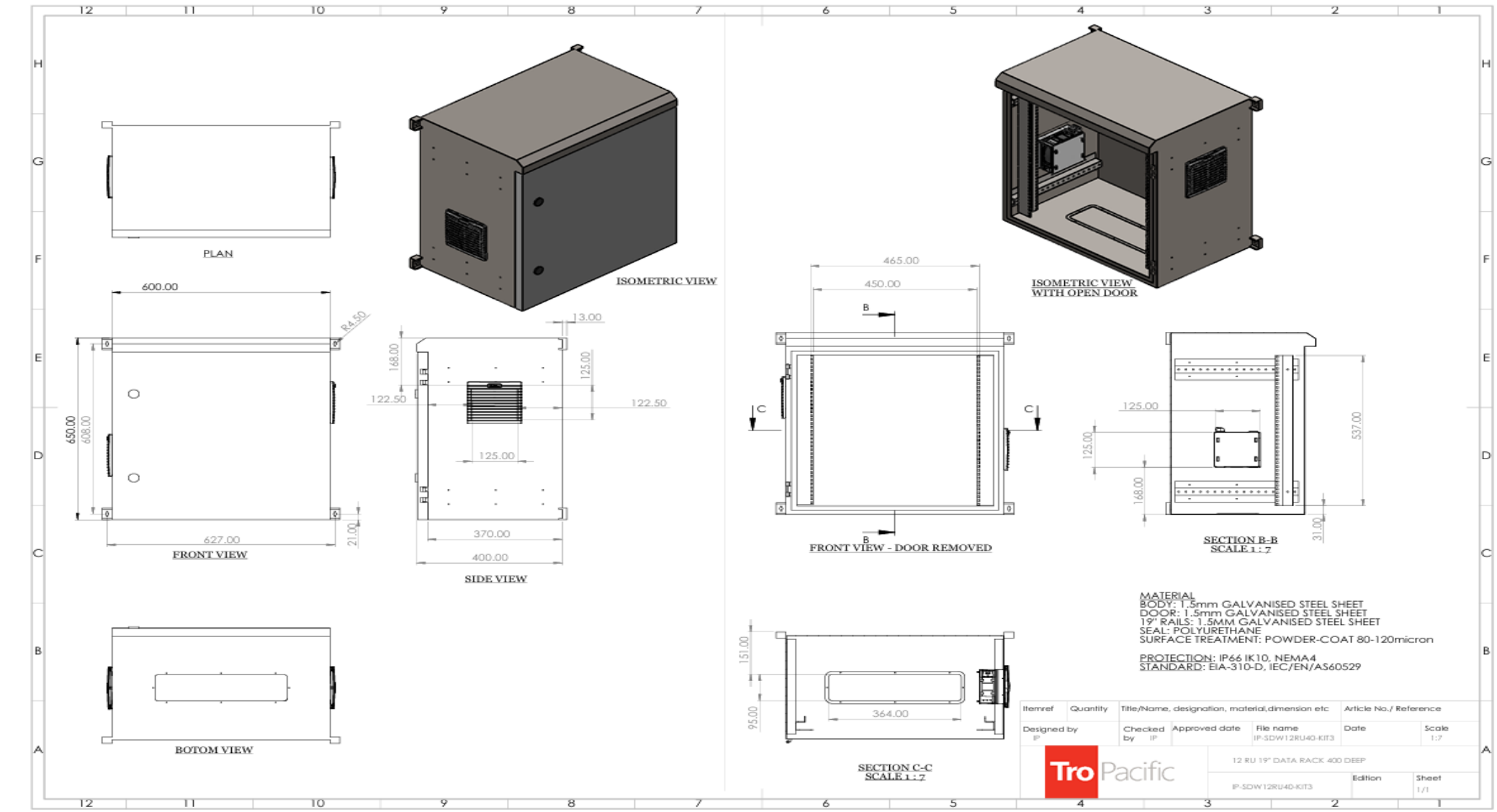

ELECTRICAL TREADMILL TRICYCLE

Competition: Dassault Systèmes Sponsored “Aakruti 2021”

Team Members: Kenilkumar Surani, Harshal Vaholiya

Description:
Developed an innovative Electrical Treadmill Tricycle for Aakruti 2021, a prestigious national design competition. Unlike traditional bicycles, which research shows may cause repetitive strain, back pain, saddle-related discomfort, and neglect of some vital muscle groups due to their seated posture, this project provides a healthier alternative. It enables the rider to walk on a treadmill platform while traveling, promoting better ergonomics and full-body fitness during daily commutes.

Motivation & Innovation:
This tricycle was conceived in response to studies highlighting musculoskeletal and genitourinary drawbacks linked to long-term bicycle use. The design incorporates a power regeneration system that harnesses energy when going downhill, increasing travel range and supporting green mobility.

Role & Responsibilities:
- Lead CAD designer, creating the full 3D SolidWorks model.
- Engineered treadmill and frame integration, drivetrain layout, and energy recovery components.
- Collaborated in mechanical concept development, simulation, and presentation.

Software/Tools Used:
- SolidWorks student 2021 (3D design and visualization)

Key Outcomes:
- Recognized for combining wellness and sustainable transport innovations in a single design.
- Demonstrated advanced CAD modeling, ergonomic innovation, and green engineering to a national panel.

ELECTRICAL TREADMILL TRICYCLE

Visuals:

Rendered views of Electric Treadmill Tricycle

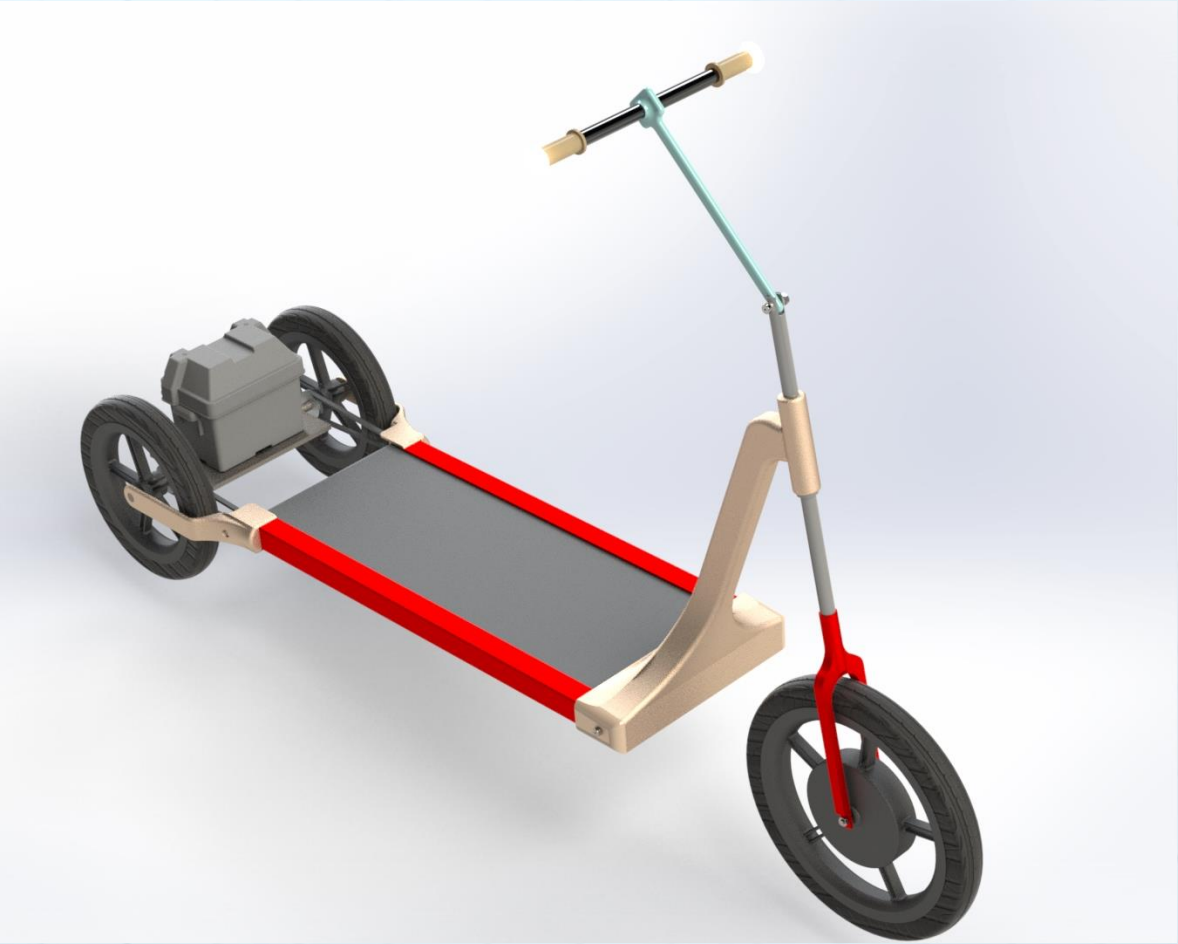

CENTRIFUGAL PUMP DESIGN & TECHNICAL ILLUSTRATIONS FOR PUBLICATION

Client: Kirit Domadiya (Service Solution Manager, Sundyne Middle East) (June 2021)

Description:
Provided comprehensive CAD modeling and high-quality render images of centrifugal pump systems and components to support technical book authorship by a recognized industry professional. This project focused on clear component visualization, cutaway assemblies, and entire pumping system schematics for use in educational and reference materials.

Role & Responsibilities:
- Modeled all key pump components, including impeller, casing, and mechanical seal assemblies, using SolidWorks.
- Produced detailed sectional and exploded renders to aid technical explanation and visual learning.
- Coordinated closely with the author to ensure each visual met precise technical and educational requirements.

Key Outcomes:
- Illustrated core pump mechanics for print and digital publication, enhancing the clarity and appeal of the client's technical manuscripts.
- Gained hands-on insight into the construction, operation, and maintenance of centrifugal pumps under direct mentorship from an industry expert.

Visuals:
CAD renderings and cross-sections for publication:

CENTRIFUGAL PUMP DESIGN & TECHNICAL ILLUSTRATIONS FOR PUBLICATION

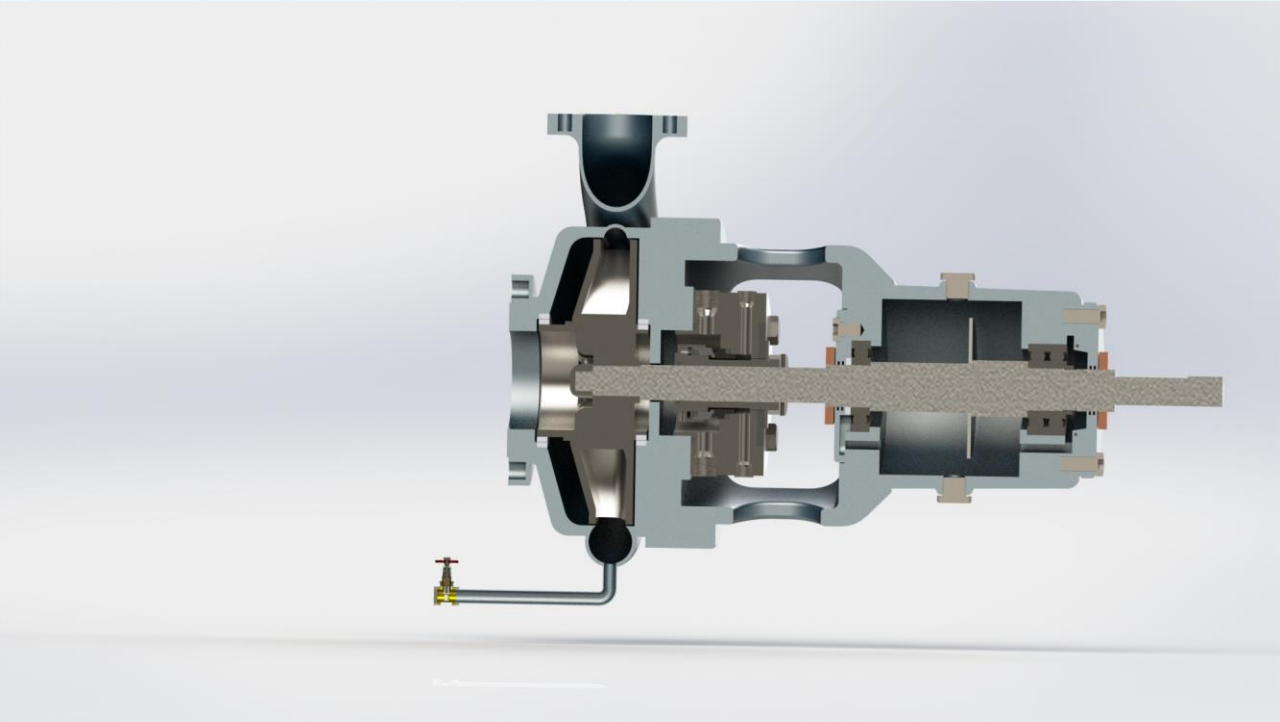

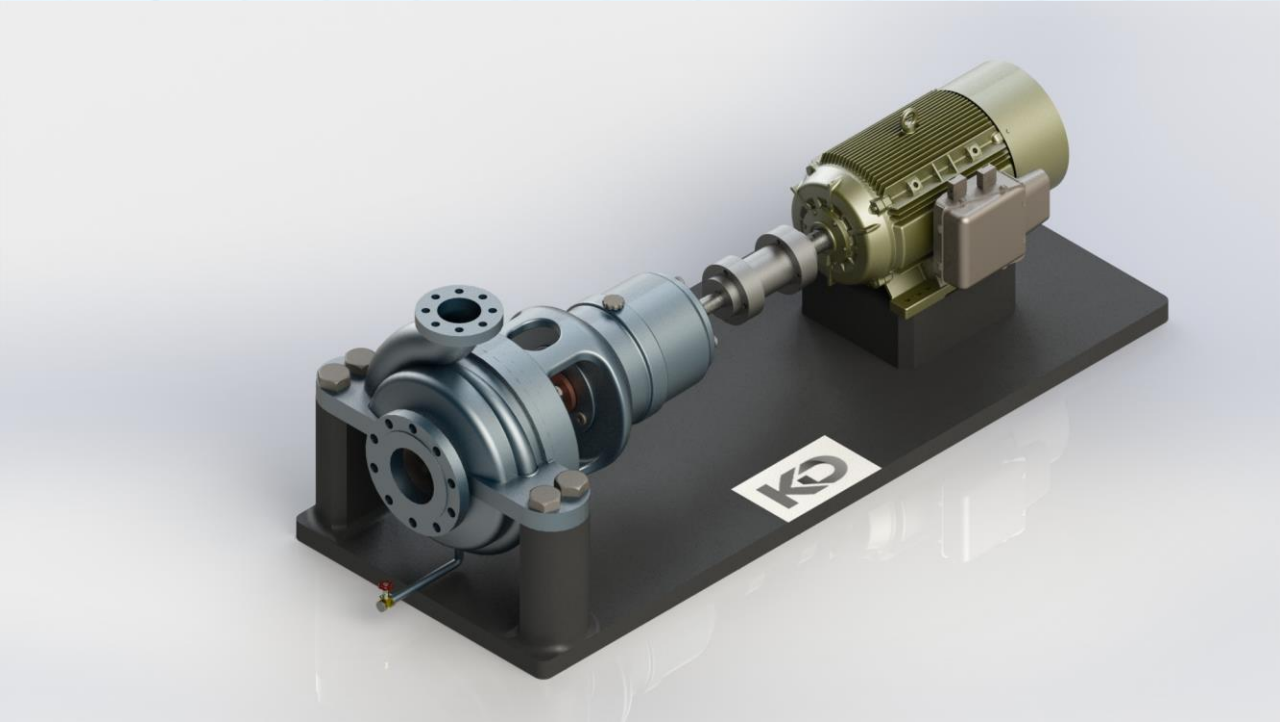

CENTRIFUGAL PUMP DESIGN & TECHNICAL ILLUSTRATIONS FOR PUBLICATION

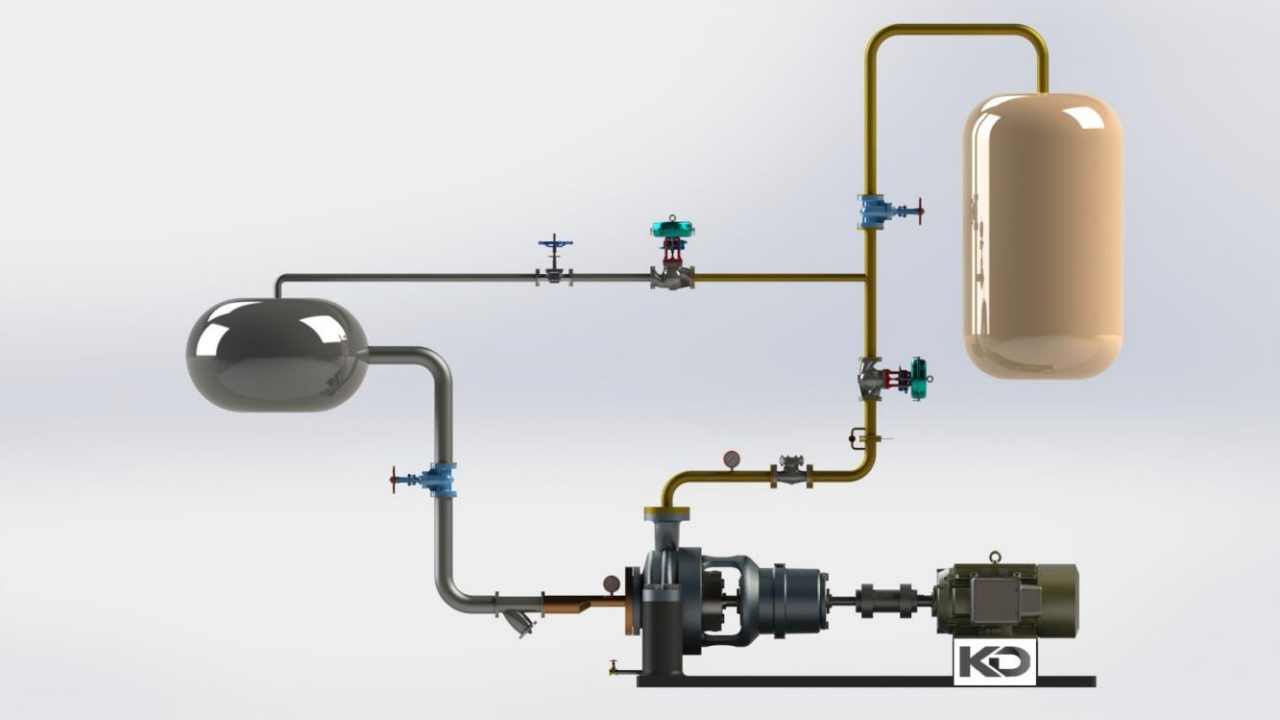

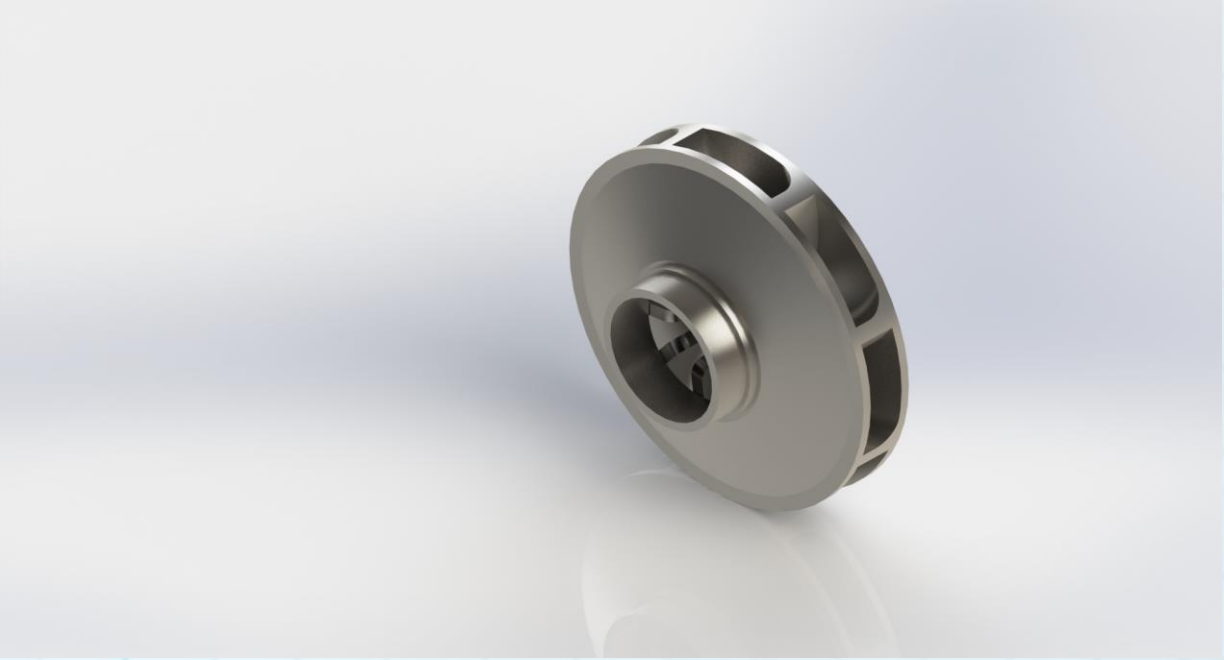

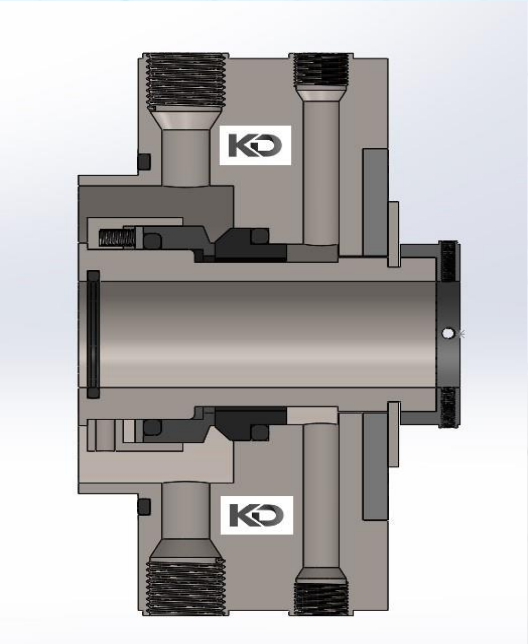

MANUAL VARIABLE TRANSMISSION (MVT) FOR ELECTRIC VEHICLE

Academic Project, (2021 -2022)

Team: Kenilkumar Surani, Harshal Vaholiya, Kishan Viradiya

Funding: Student Startup and Innovation Policy (SSIP) 2021

Description:
Developed an innovative Manual Variable Transmission (MVT) system specifically designed for electric bikes, at a time when most EV bikes featured only single-speed direct-drive mechanisms. The team recognized that introducing a multi-ratio transmission could significantly improve range, efficiency, acceleration, and hill-climbing performance for electric vehicles.

Motivation & Innovation:
Traditional electric bikes use single-speed direct-drive, which operates efficiently only within a narrow band of speeds. Integrating a manually variable transmission enables the motor to operate in its optimal zone, resulting in higher efficiency, extended range, and improved driving dynamics. The system used two cone pulleys, a V-belt, power screw actuators, and dual BLDC motors coded by Raspberry Pi for intelligent gear ratio adjustment according to speed and load.

Role & Responsibilities:
- Lead CAD designer responsible for all MVT components and assembly, using SolidWorks for design and visualization.
- Designed and fabricated a dedicated test bench for real-world transmission trials.
- Oversaw platform manufacturing via CNC at the university workshop, supervised integration, and led practical testing, including installation in a working e-bike.

MANUAL VARIABLE TRANSMISSION (MVT) FOR ELECTRIC VEHICLE

Technical Features & Validation:

- Achieved gear ratio range of 3.1 to 1.4, enabling torque and speed variations between 458 to 1021 rpm at constant motor speed, without a clutch.

- Experimental results showed:
  - Accelerated gradeability up to 40% higher than standard direct-drive bikes.
  - Up to three times increased acceleration and 33% reduction in required motor size for the same performance.
  - Extended vehicle range by 10% without altering the battery.
  - Figures reveal a speed range from 17 to 60 km/h and torque outputs up to 91 Nm at lower gears.

- Final deployment and tests on a real electric bike demonstrated clear improvements in both efficiency and dynamic capability.

Key Outcomes:

- SSIP 2021 funding supported prototype development and validation.
- Recognized as a novel engineering solution advancing electric vehicle technology in university and innovation policy circles.

Visual:

- Here Visuals show the render image of MVT on one testing platform.
- in first 2 image show MVT with testing platform designed in SolidWorks. (we designed one testing platform also to test MVT before assemble in Bike for testing.)
- Last 2 image show some photos of components of MVT that we manufactured.

MANUAL VARIABLE TRANSMISSION (MVT) FOR ELECTRIC VEHICLE

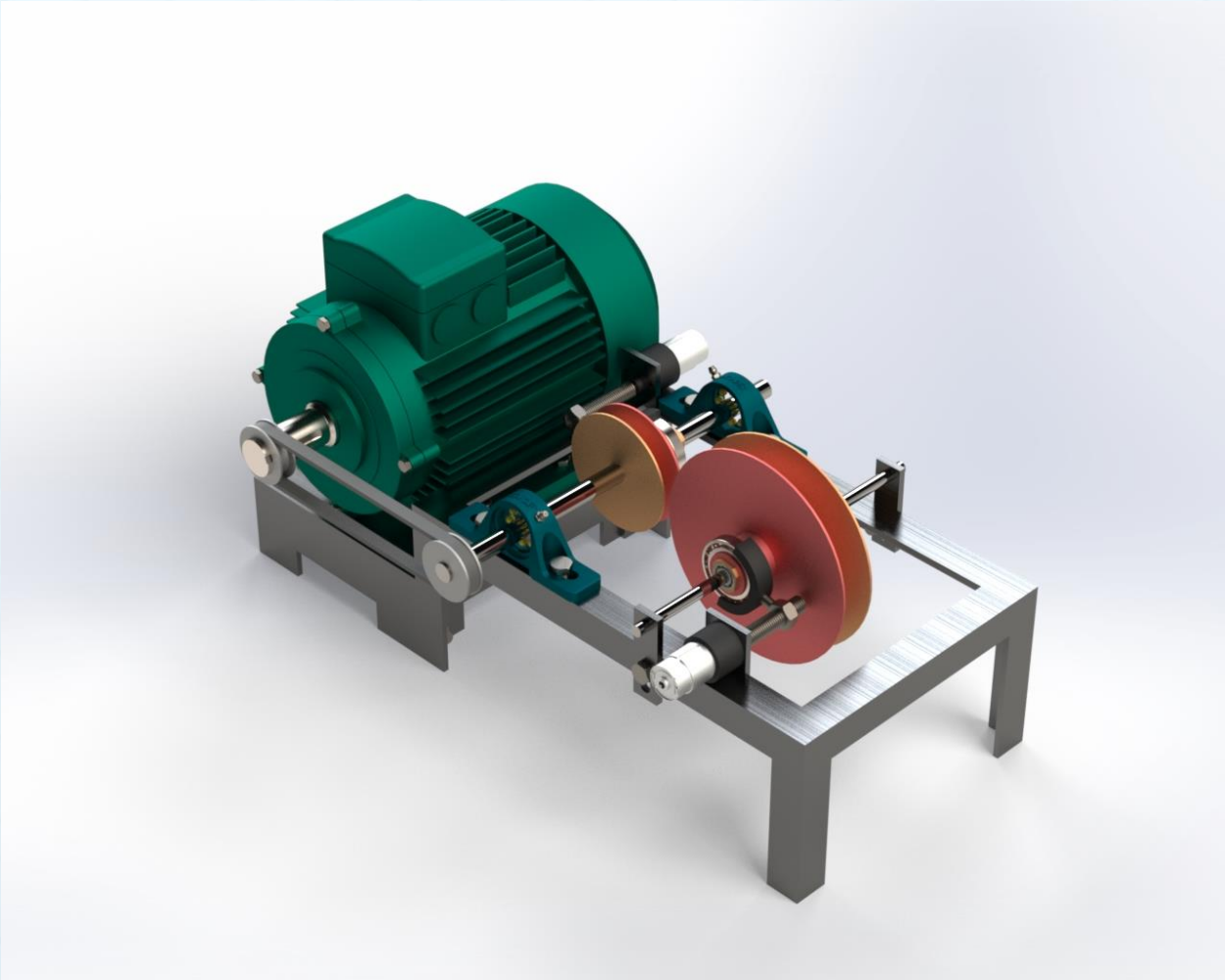

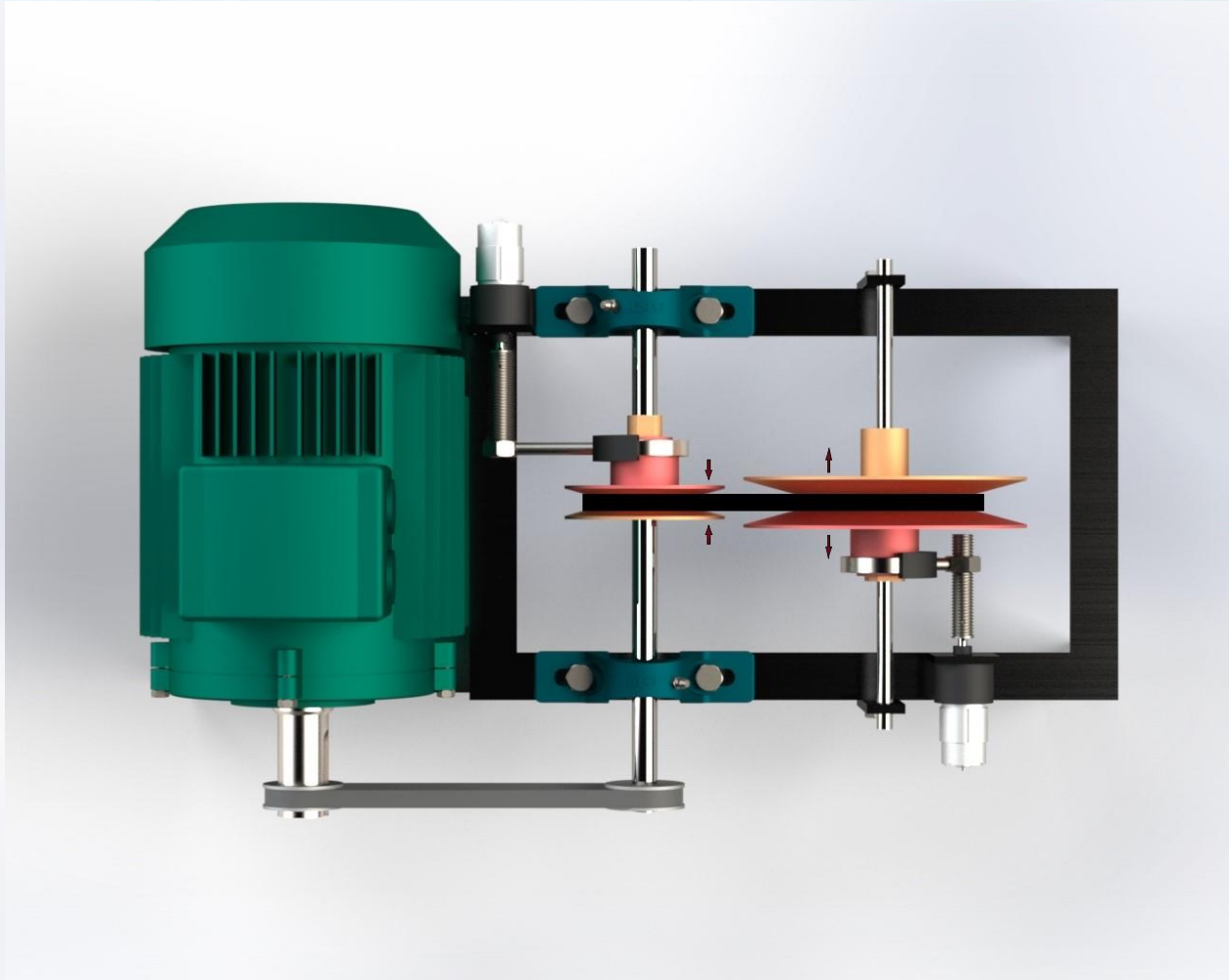

MANUAL VARIABLE TRANSMISSION (MVT) FOR ELECTRIC VEHICLE

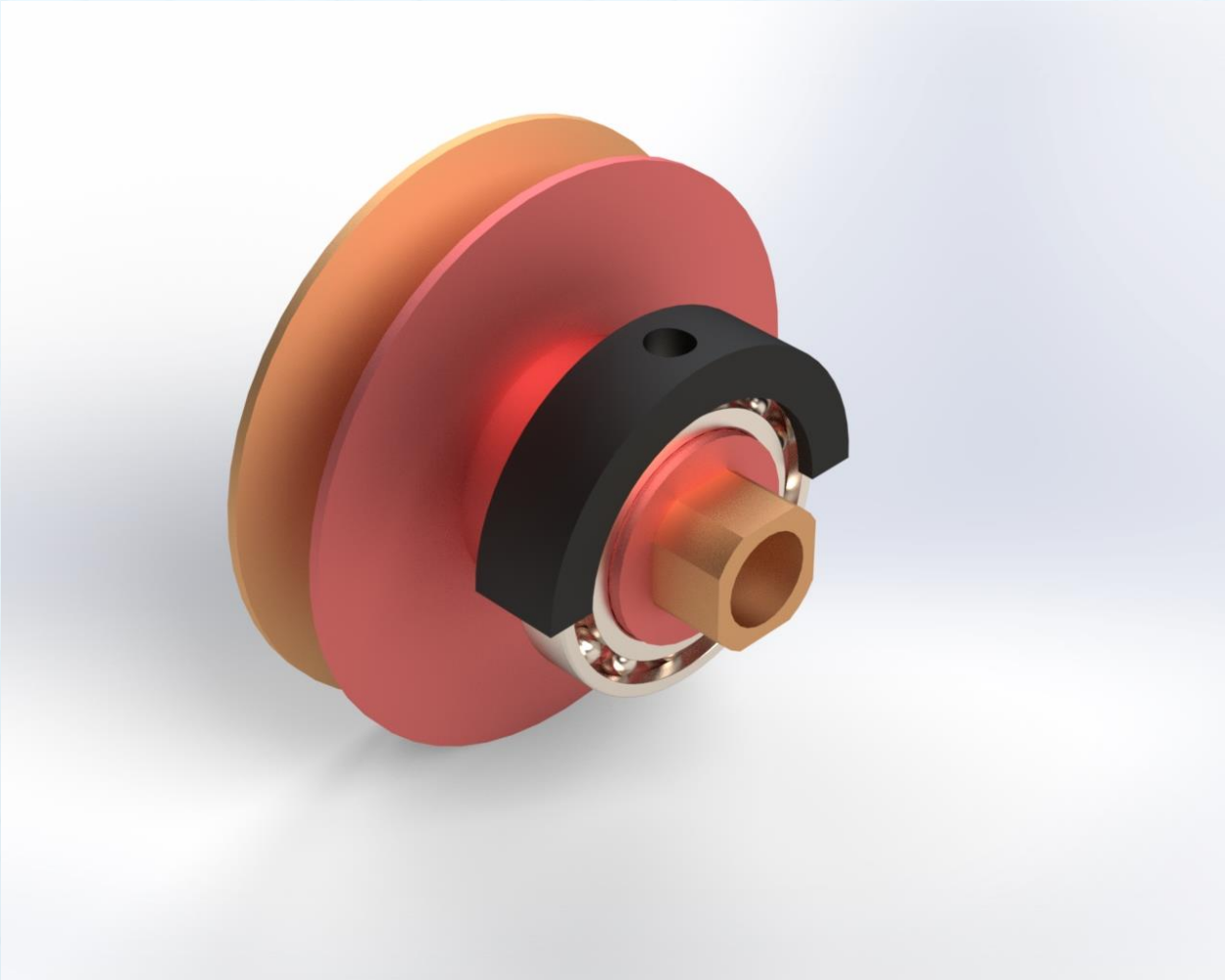

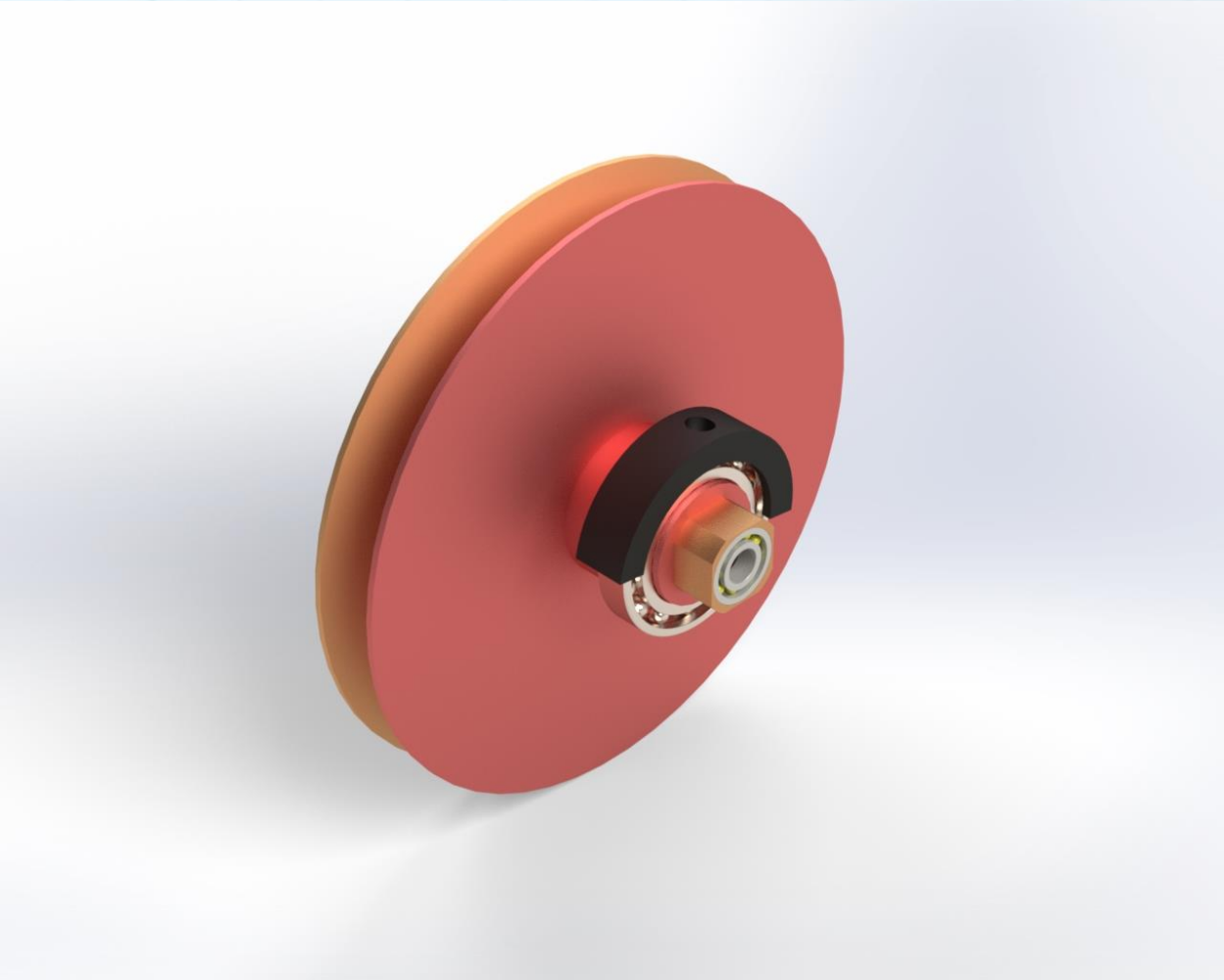

MANUAL VARIABLE TRANSMISSION (MVT) FOR ELECTRIC VEHICLE

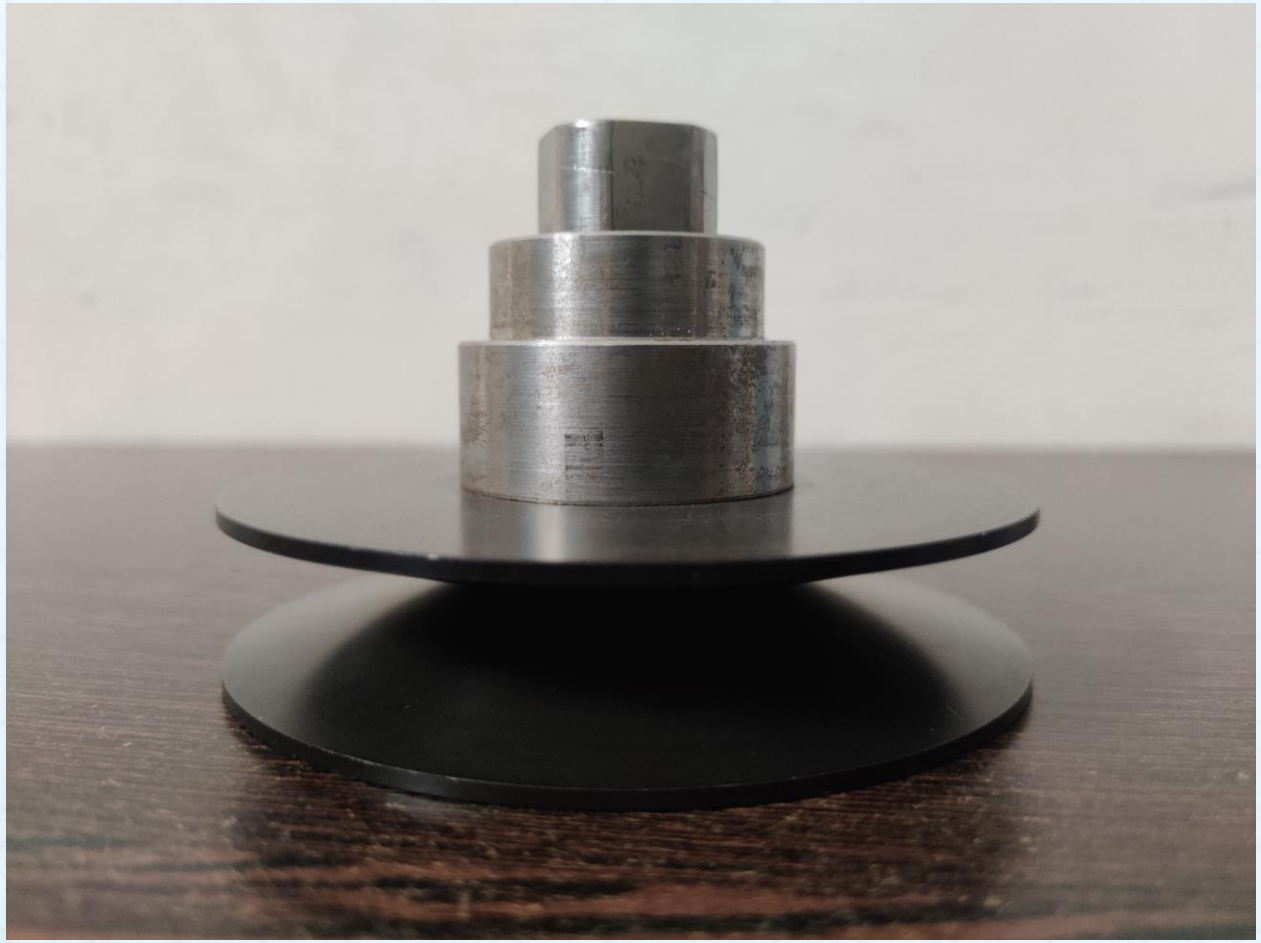

SKILLS

Education

- M.Sc. Interdisciplinary Engineering – Hochschule Trier, Germany (09/2023 – Present)
- B.Tech. Automobile Engineering – Uka Tarsadia University, India (07/2018 – 01/2023)

Certifications

- Dassault Systèmes SolidWorks Associate – Mechanical Design, Sustainability
- Dassault Systèmes SolidWorks Professional – Mechanical Design, Drawing Tools, Mold Making, Sheet Metal, Surfacing
- edX – Electric Cars: Business & Technology
- MITx – Introduction to Aerospace Engineering
- IBM – Python Essentials

*** My all certificates can be verified online. All certifications' links are available in my LinkedIn profile.**

References & Contact

- Available upon request
- Contact: Kenilkumar Surani
  Phone: +49 157 5825 3235
  Email: kenilsurani2141@gmail.com
  LinkedIn: www.linkedin.com/in/kenil-surani

Thank you for your time and consideration!